50MC90B20 MAGNECLUTCH PERFORMANCE & OUTLINE

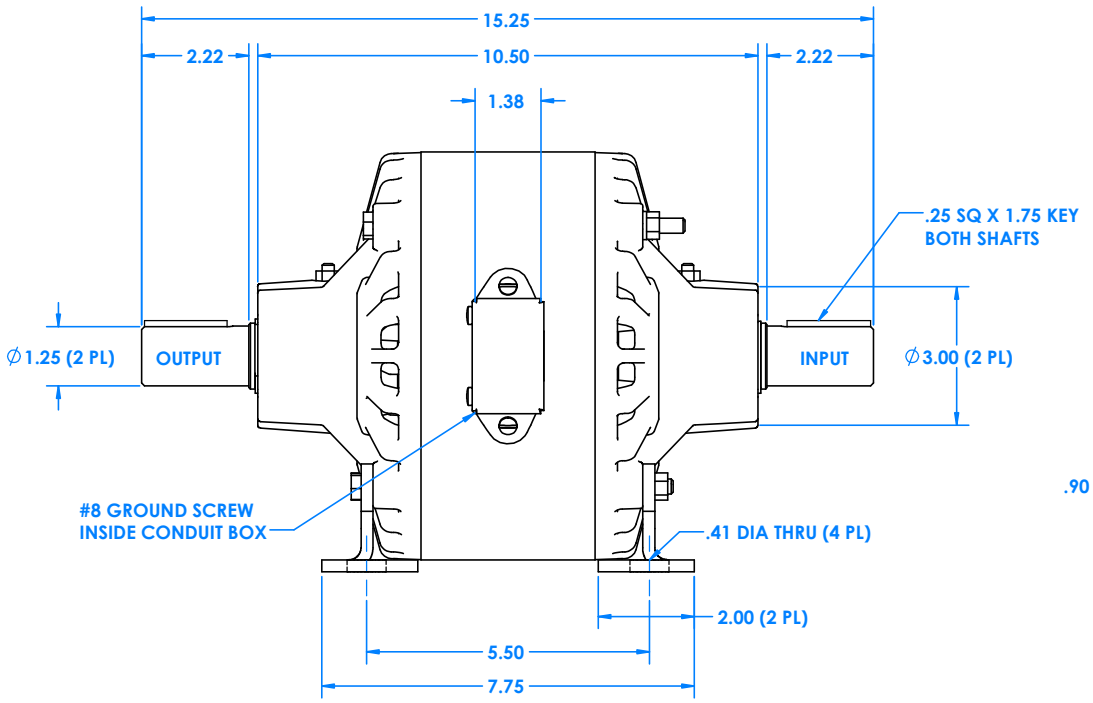

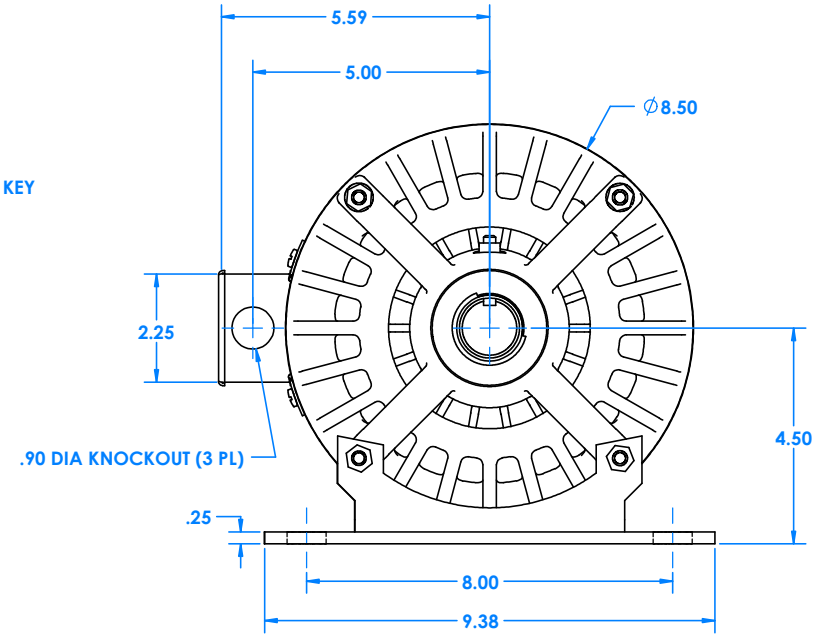

UNITS: INCHES

MAGNE POWER
www.magne-power.com
service@magne-power.com
888-776-2463

50MC90B20

P/N 0750361

TYPE OF COOLING	**AIR CONVECTION**
MOUNTING	**BASE**
MAXIMUM SHAFT DEVIATION FROM HORIZONTAL	**30°**

SPECIFICATIONS

TORQUE RANGE (LB. FT.)	**.4 - 50**
SPEED RANGE (RPM)	**0 - 3600**
HEAT DISSIPATION (WATTS AT 1800 RPM)	**1050**
(HP AT 1800 RPM)	**1.41**
NON-EXCITED DRAG TORQUE (LB. FT.) MAX	**.4**
WEIGHT LBS. (APPROX)	**57**
INERTIA - (LB. FT.^{2}) - OUTER MEMBER	**.24**
- INNER MEMBER	**.18**

COIL DATA

VOLTS DC	COIL TEMPERATURE (°C)	RESISTANCE (OHMS)	RATED CURRENT (AMPS)	CURRENT TIME CONSTANT (SEC)	TORQUE TIME CONSTANT (SEC)
90	**20**	**127**	**.53**	**.22**	**.38**

The time in seconds for current or torque to reach 63% of its final value after a step change in voltage is applied.

MODEL CODE

50 MC 90 B 20

- 50 — RATED TORQUE 50 LB. FT.
- MC — MAGNETIC PARTICLE CLUTCH
- 90 — COIL VOLTAGE 90 VDC
- B — BASE MOUNTED
- 20 — DESIGN NUMBER

NOTE: The graph represents the average, continuous heat dissipation capacity of units operating under slip conditions. Slip watts can be calculated using the formula below. To ensure the life of the unit, it may be applied up to or below the curve.

$$\text{Slip watts} = \frac{\text{Torque x (RPM in - RPM out)}}{7.04}$$

TORQUE VS. COIL CURRENT

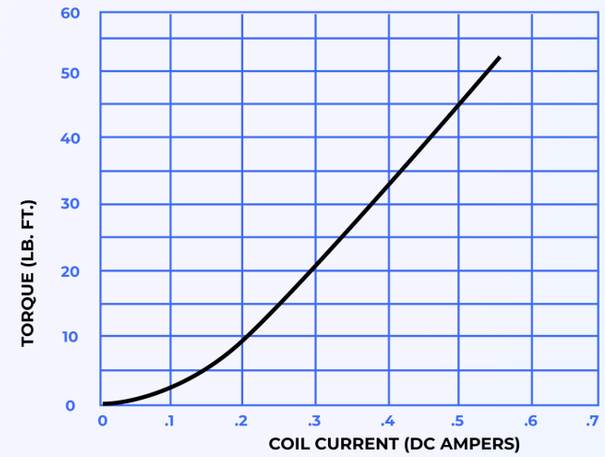
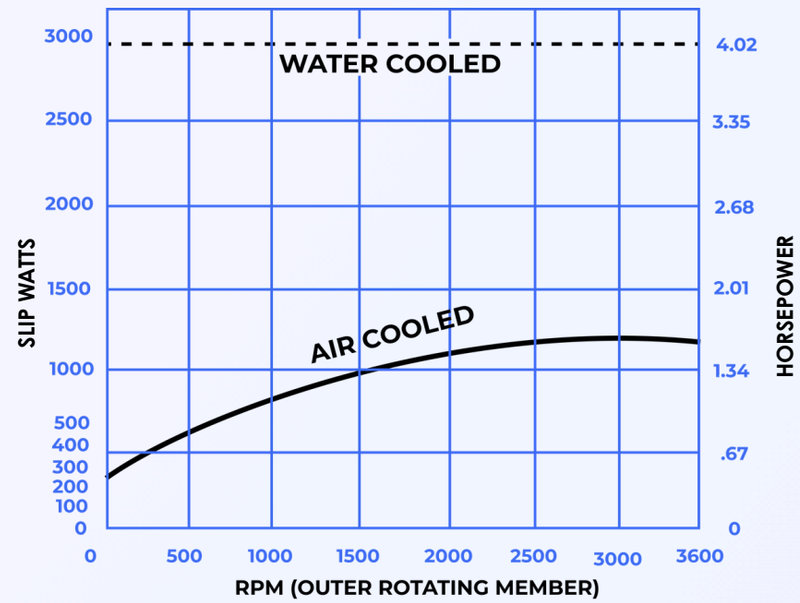
HEAT DISSIPATION VS. SPEED