100MCA90B20 MAGNECLUTCH PERFORMANCE & OUTLINE

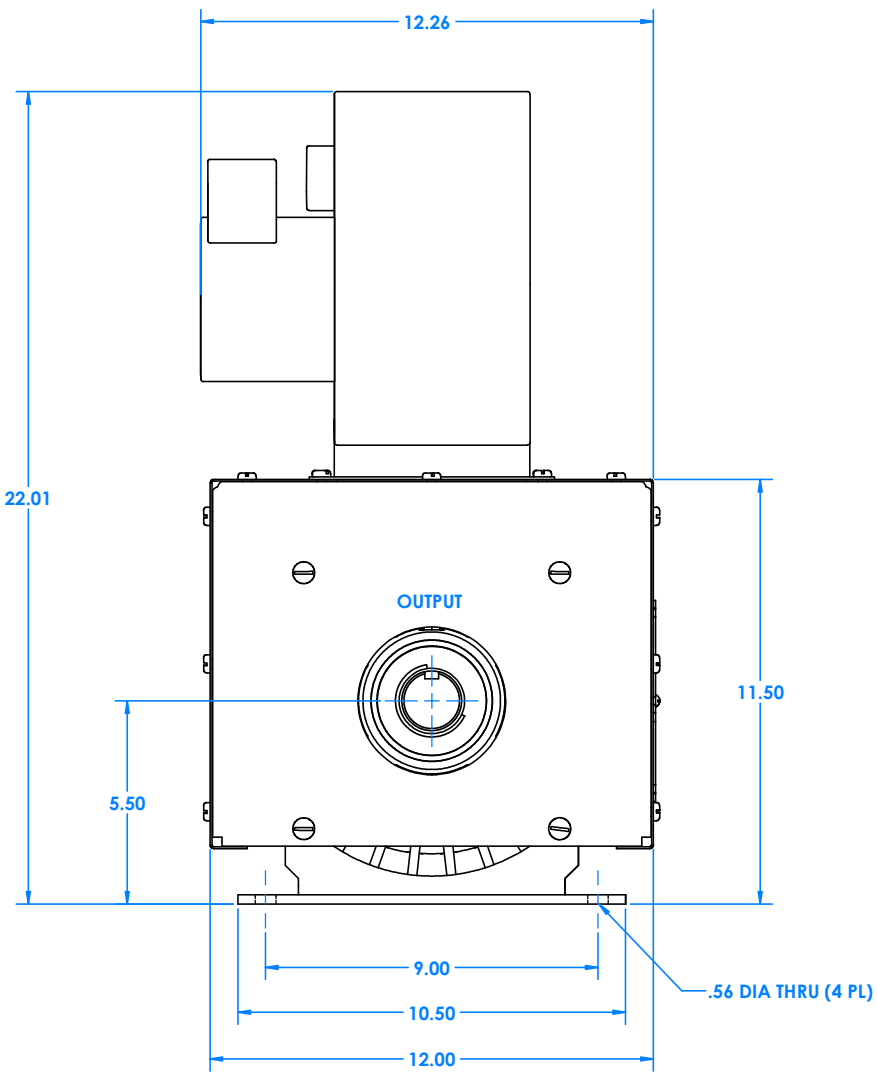

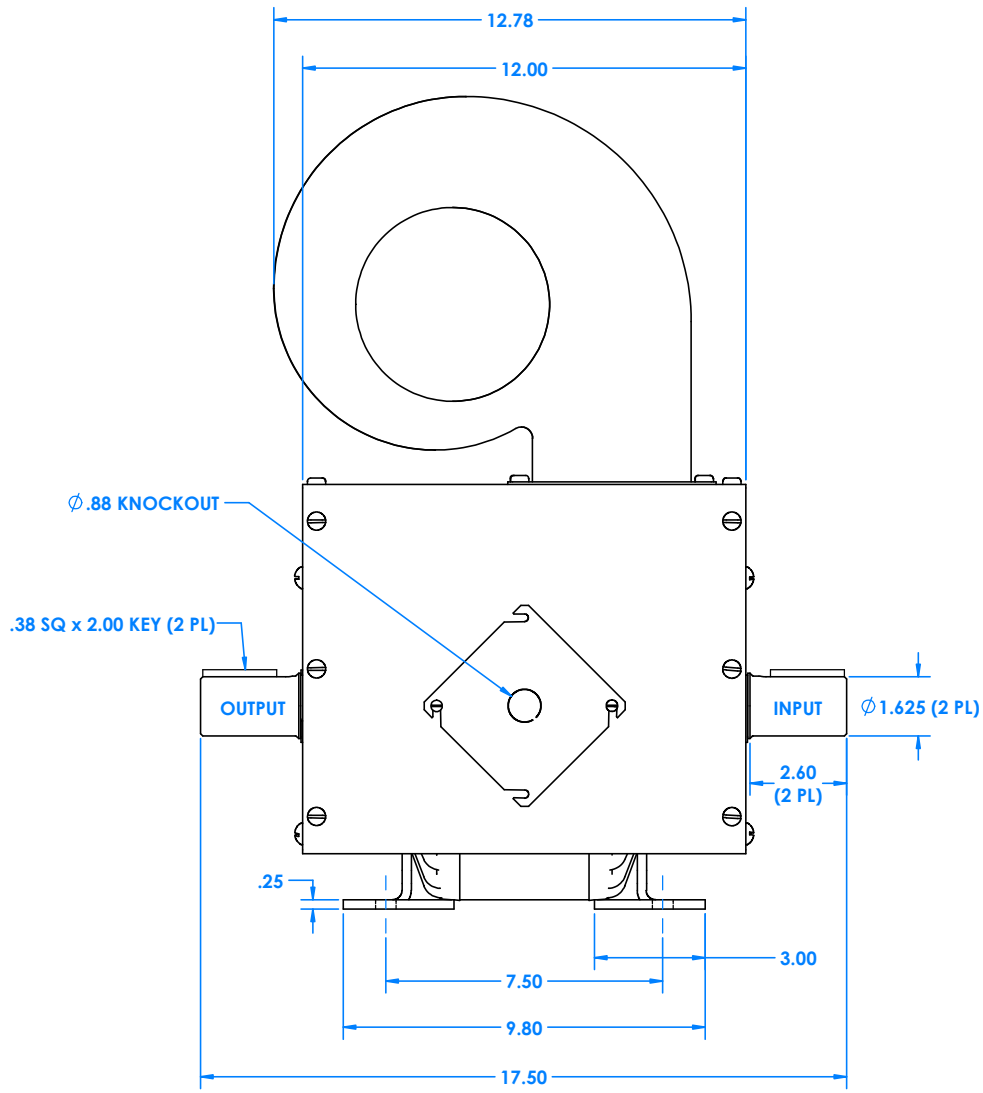

UNITS: INCHES

MAGNE POWER
www.magne-power.com
service@magne-power.com
888-776-2463

100MCA90B20

P/N 2960648-002

TYPE OF COOLING	**FORCED AIR**
MOUNTING	**BASE**
MAXIMUM SHAFT DEVIATION FROM HORIZONTAL	**30°**

SPECIFICATIONS

TORQUE RANGE (LB. FT.)	**1 - 100**
SPEED RANGE (RPM)	**0 - 3600**
HEAT DISSIPATION (WATTS AT 1800 RPM)	**1700**
(HP AT 1800 RPM)	**2.27**
NON-EXCITED DRAG TORQUE (LB. FT.) MAX	**1**
WEIGHT LBS. (APPROX)	**110**
INERTIA - (LB. FT.^{2}) - OUTER MEMBER	**.68**
- INNER MEMBER	**.46**

BLOWER DATA

115V AC, 1 Ph **Frequency 50/60 Hz**

1/10 hp **Current 2.05 A**

COIL DATA

VOLTS DC	COIL TEMPERATURE (°C)	RESISTANCE (OHMS)	RATED CURRENT (AMPS)	CURRENT TIME CONSTANT (SEC)	TORQUE TIME CONSTANT (SEC)
90	**20**	**68**	**1**	**.6**	**.82**

The time in seconds for current or torque to reach 63% of its final value after a step change in voltage is applied.

MODEL CODE

100 MC A 90 B 20

- **100** — RATED TORQUE 100 LB. FT.
- **MC** — MAGNETIC PARTICLE CLUTCH
- **A** — FORCED AIR COOLED
- **90** — COIL VOLTAGE 90 VDC
- **B** — BASE MOUNTED
- **20** — DESIGN NUMBER

NOTE: The graph represents the average, continuous heat dissipation capacity of units operating under slip conditions. Slip watts can be calculated using the formula below. To ensure the life of the unit, it may be applied up to or below the curve.

$$\text{Slip watts} = \frac{\text{Torque x (RPM in - RPM out)}}{7.04}$$

TORQUE VS. COIL CURRENT

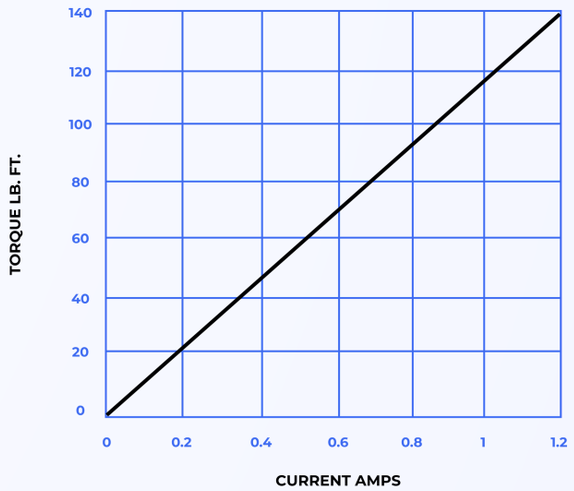
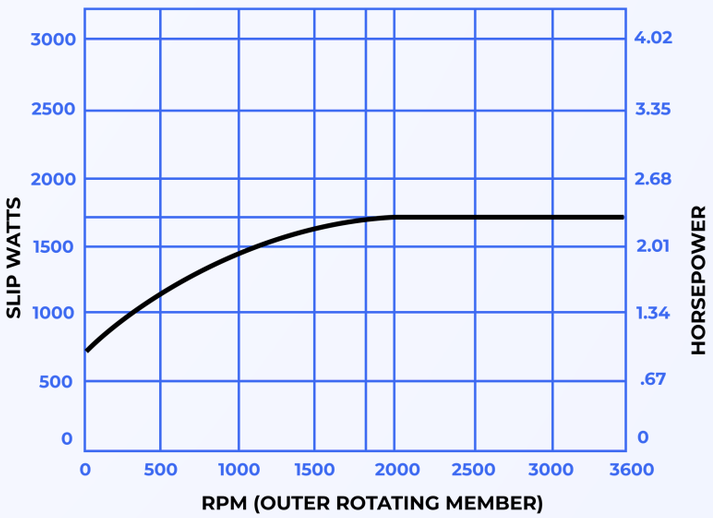
HEAT DISSIPATION VS. SPEED